MODEL MHUBX8 NON-ISOLATED REPEATER HUB

RS232/RS485 MASTER PORTS & 8 RS485 DISTRIBUTION PORTS

REV. C

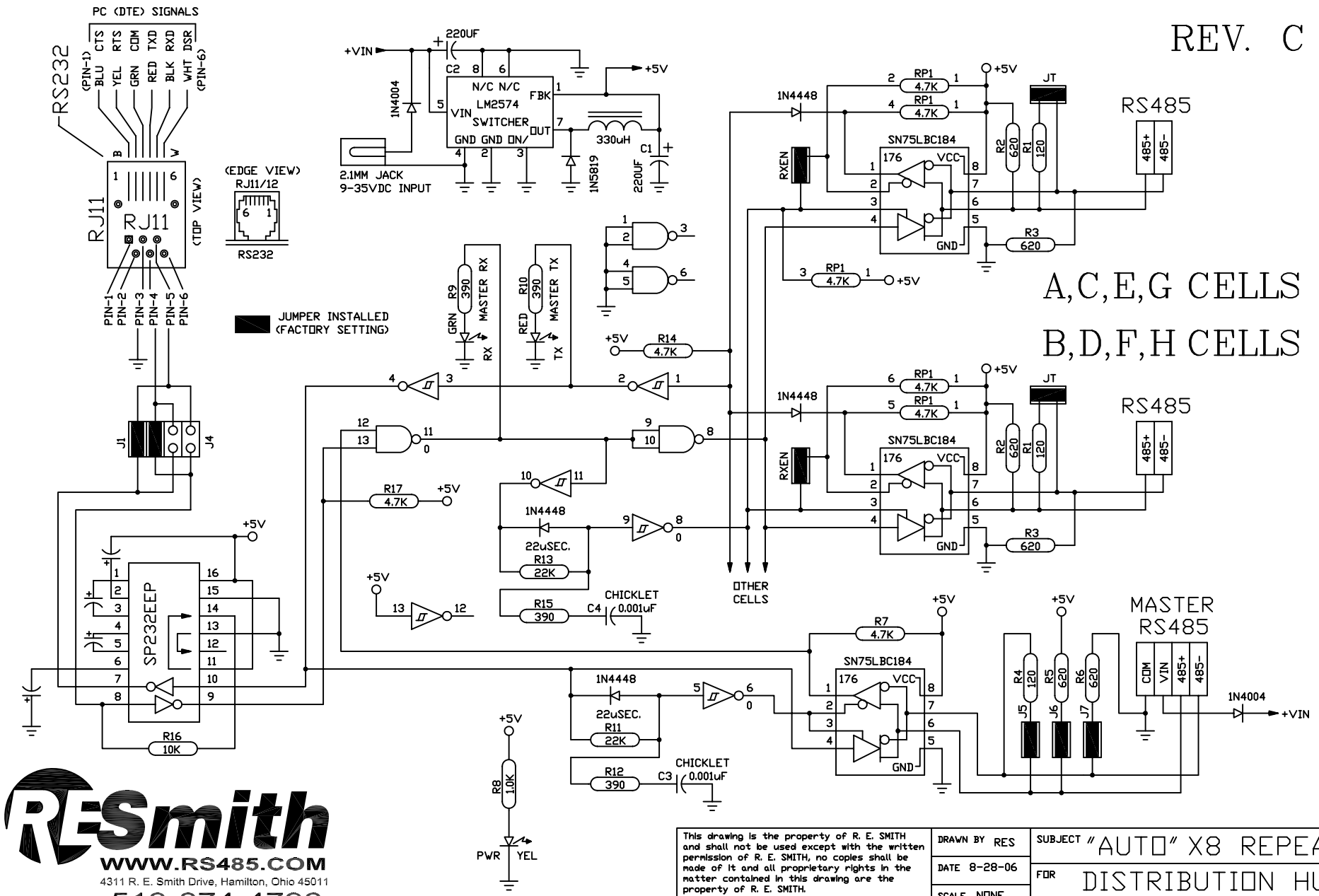

RESmith
WWW.RS485.COM
4311 R. E. Smith Drive, Hamilton, Ohio 45011
513-874-4796

This drawing is the property of R. E. SMITH and shall not be used except with the written permission of R. E. SMITH, no copies shall be made of it and all proprietary rights in the matter contained in this drawing are the property of R. E. SMITH.
COPYRIGHT - R. E. SMITH, 2001-2004

SHEET 1 OF 1	MHUBX8	DRAWN BY RES	SUBJECT "AUTO" X8 REPEATER
		DATE 8-28-06	FOR DISTRIBUTION HUB
		SCALE NONE	
		CHKD. BY RES	RES R. E. SMITH 4311 R. E. SMITH DRIVE HAMILTON, OHIO 45011 — DWG. NO. MHUBX8 — REV. C