ISOLATED RS485 MODEL IHV24XT RS485

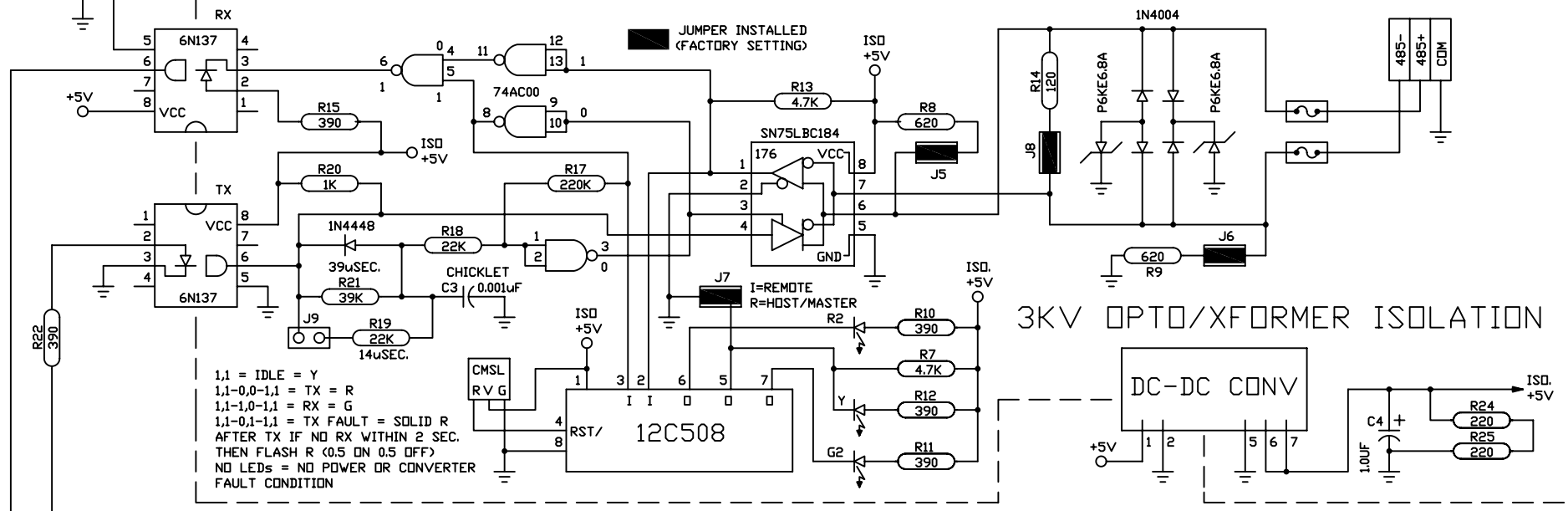

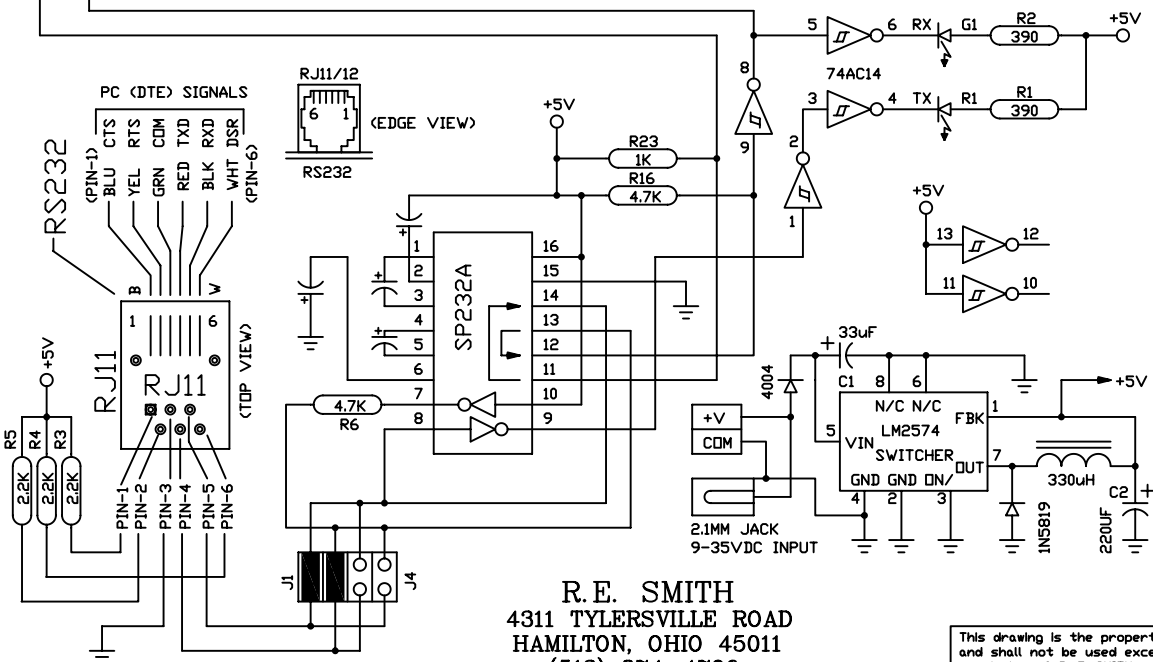

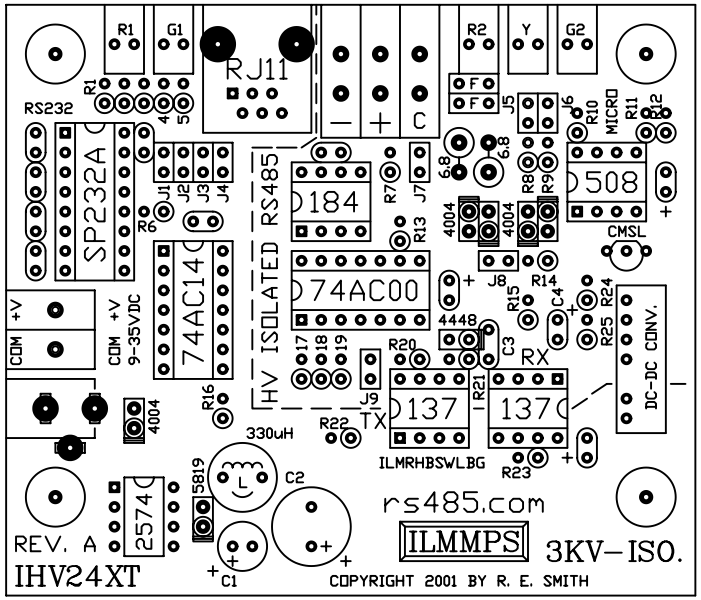

R.E. SMITH
4311 TYLERSVILLE ROAD
HAMILTON, OHIO 45011
(513) 874-4796

NEW FEATURES: DUAL TRANSIENT PROTECTION, SCHMITT TRIGGER TIMING, SPEED-UP JUMPER, JUMPER SELECTABLE MASTER/REMOTE SOFTWARE, AND SCREW TERMINAL POWER CONNECTION.

www.rs485.com

This drawing is the property of R. E. SMITH and shall not be used except with the written permission of R. E. SMITH, no copies shall be made of it and all proprietary rights in the matter contained in this drawing are the property of R. E. SMITH.
COPYRIGHT - R. E. SMITH, 2001

DRAWN BY RES	SUBJECT "AUTO" RS232/RS485		
DATE 7-21-01	FOR 3000VDC ISOLATED		
SCALE NONE	RES R. E. SMITH 4311 TYLERSVILLE RD. HAMILTON, OHIO 45011	DWG. NO. IHV24XT	REV. A
SHEET 1 OF 1 / IHV24XT	CHKD. BY RES		